CH251 Datasheet

V1A

https://wch-ic.com

1. Overview

CH251 is a simplified version of USB Type-C cable e-Marker chip, support USB Type-C 2.1 standard and USB PD 3.1 standard, can be used for Type-C five-core cable related applications. The CH251 chip integrates VCONN diode, Ra resistor, VBUS power supply unit and high-voltage LDO internally, which can be operated in a single chip without peripheral devices.

The CH251 ships with a default configuration programmed in internally, and supports chip, terminal or finished cable to update the configuration data through the Type-C port for programming. In addition to the default configuration, each piece of CH251 also supports up to 5 times of configuration data updating and writing, and has a data lock function. The factory default configuration data of CH251 has a variety of options.

The VBUS of CH251L supports up to 22V input voltage power supply and can be used for 100W (20V5A) power Type-C five-core cable; CH251X, compared to CH251L, VBUS supports up to 52V input voltage power supply and can be used for 240W (48V5A) power Type-C five-core cable.

2. Features

- VCONN supports 2.7V to 22V input voltage
- CH251X VBUS supports 4.7V to 52V input voltage
- Support USB Type-C 2.1 standard and USB PD 3.1 standard
- Integrated VCONN diode and Ra resistor
- VCONN pin voltage tolerant 25V, CC pins tolerant voltage 28V, VBUS pin tolerant voltage 56V (CH251X)
- Support configuration data update program
- Support EPR Mode
- Support Get_Manufacturer_Info message, manufacturer string configurable

3. Application

- USB Type-C Passive Cable

4. Pins

4.1 CH251 Package Pin Arrangement

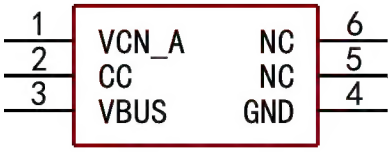

CH251L(DFN6-2×2)

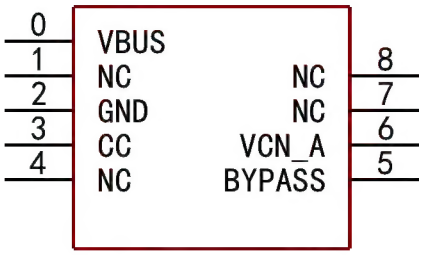

CH251X(DFN8-2×2)

4.2 CH251 Pin Function Description

Pin No.		Pin name	Type	Pin description
CH251L	CH251X			
0,4	2	GND	Power	Common ground terminal
1	6	VCN_A	Power	Proximal VCONN, working power input
-	5	BYPASS	Power	External connect 10nF capacitance
3	0	VBUS	High voltage power	Input pin of high voltage power supply
2	3	CC	Bidirectional	Type-C PD communication
5,6	1,4,7,8	NC	-	Reserved pins, can be grounded or keep suspended

5. Typical Application

5.1 CH251L, Single-end eMarker

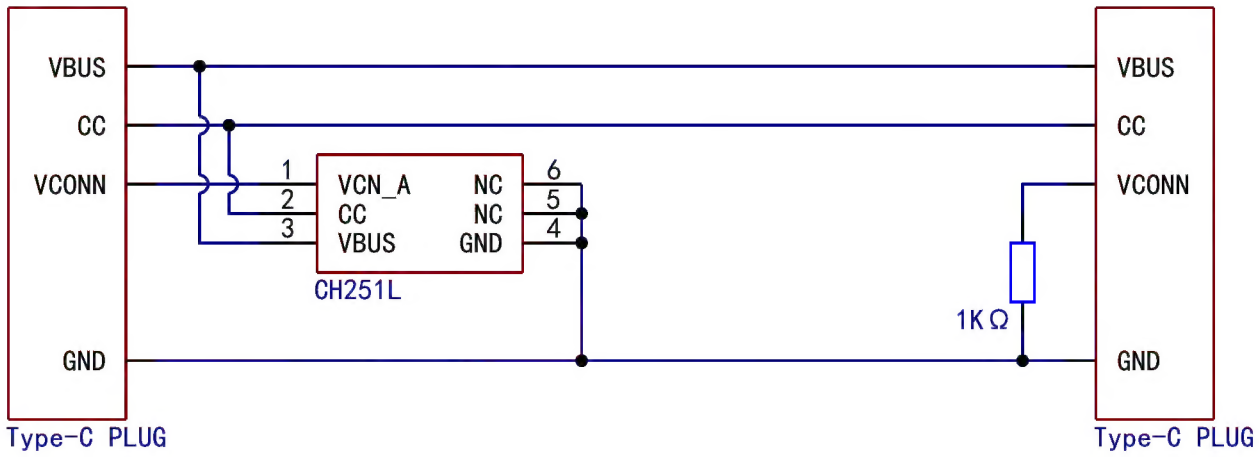

5.2 CH251X, Single-end eMarker

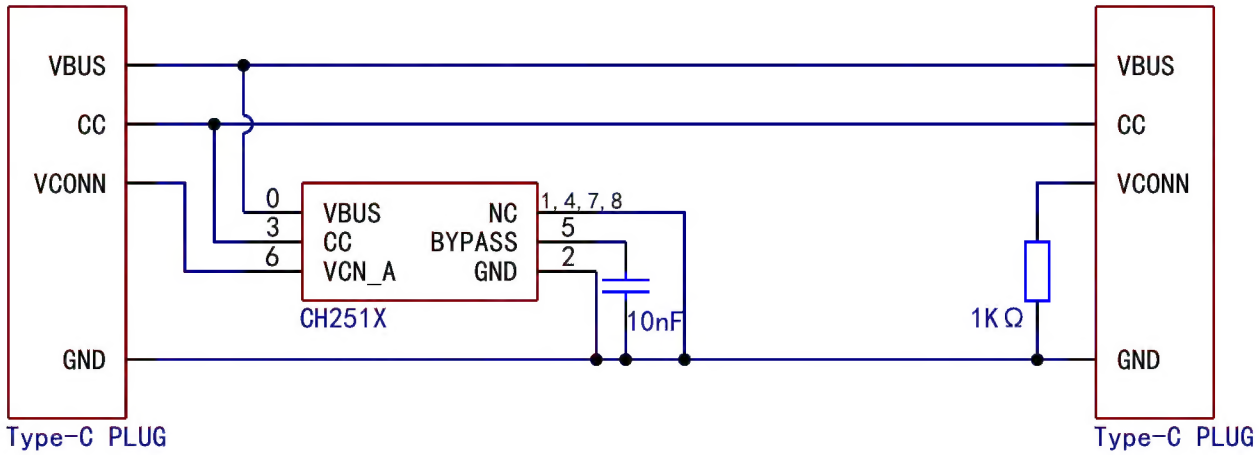

6. Function Description

6.1 Overview

CH251 is a USB Type-C cable e-Marker chip that supports USB Type-C 2.1 standard and USB PD 3.1 standard. It can be used in various Type-C cable related applications. After the equipment supplies power to the CH251 through the VBUS line in the Type-C interface, it communicates with the CH251 through the CC pin to realize the eMarker related functions.

6.2 SOP' Communication

SOP' is the protocol used for the interface communication between equipment and cable in USBPD protocol. After detecting the existence of Ra in the interface, the equipment supplies power to the cable interface through VBUS, and uses SOP' messages to communicate with the eMarker chip in the cable interface.

6.3 Supported Message

CH251 supports the following three message types: Hard Reset, Cable Reset, and SOP' messages. Other types of messages are ignored and GoodCRC is not replied.

When the Hard Reset and Cable Reset messages are received, the CH251 chip will perform a reset operation and all working states will be reset.

When a SOP' message is received, CH251 replies to the GoodCRC message. Only the messages listed in the following table will be further processed and responded to, while unlisted messages will be ignored after replying to GoodCRC messages.

When a message is received from the USBPD2.0 specification version, CH251 automatically adapts according to the protocol version.

Message property	Message type	Description
Control Message	Soft_Reset	The software resets the message, resets the received and sent Message ID.
Data Message	BIST	Built-in messages for testing.
	Discover Identity	Cable characteristic identification instruction. See 6.3.1 for details.
	Discover SVIDs	Cable standard ID or vendor ID identification instructions. See 6.3.2 for details.
	Discover Modes	Cable pattern recognition instructions. See 6.3.3 for details.
	Enter Mode	Cable mode entry command. See 6.3.3 for details.
	Exit Mode	Cable mode exit instruction. See 6.3.3 for details.
Extended Message	Get_Status	Get the cable interface temperature information.
	Get_Manufacturer_Info	Get manufacturer information. See 6.3.4 for details.

6.3.1 Discover Identity

Discover Identity messages are used for devices to obtain cable characteristics from eMarker, including cable brand, length, voltage and current carrying capacity, maximum communication rate and so on. When CH251 receives a Discover Identity REQ, it replies with a Discover Identity ACK message. According to the USB PD 3.1 protocol, the Discover Identity ACK message consists of five VDO in the following table, which also marks the default configuration.

ID Header VDO:

Bit(s)	Description

31	USB Communications Capable as USB Host 0b - Not capable ***[Default]*** 1b - Capable
30	USB Communications Capable as a USB Device 0b - Not capable ***[Default]*** 1b - Capable
29~27	SOP' Product Type (Cable Plug/VPD) 011b - Passive Cable ***[Default]*** 100b - Active Cable
26	Modal Operation Supported (Alternate Modes) 0b - Not capable ***[Default]*** 1b - Capable
25~23	Reserved. Shall be set to zero.
22~21	Connector Type 00b - Reserved, for compatibility with legacy systems. 10b - USB Type-C® Receptacle 11b - USB Type-C® Plug ***[Default]***
20~16	Reserved. Shall be set to zero.
15~0	USB Vendor ID. 0x1A86 ***[Default]***

Cert Stat VDO:

Bit(s)	Description
31~0	32-bit unsigned integer, XID 0x000036E5 ***[Default]***

Product VDO:

Bit(s)	Description
31~16	16-bit unsigned integer. USB Product ID 0x8251 ***[Default]***
15~0	16-bit unsigned integer. bcdDevice 0x0000 ***[Default]***

Passive Cable VDO:

Bit(s)	Description
31~28	HW Version 0x0 ***[Default]***
27~24	Firmware Version 0x0 ***[Default]***
23~21	VDO Version 000b - Version 1.0 ***[Default]***
20	Reserved. Shall be set to zero.
19~18	USB Type-C® plug to USB Type-C®/Captive 10b - USB Type-C® ***[Default]*** 11b - Captive

17	EPR Mode Capable 0b - Cable is not EPR Mode Capable 1b - Cable is EPR Mode Capable ***[Default]***
16~13	Cable Latency 0001b - <10ns (~1m) ***[Default]*** 0010b - 10ns to 20ns (~2m) 0011b - 20ns to 30ns (~3m) 0100b - 30ns to 40ns (~4m) 0101b - 40ns to 50ns (~5m) 0110b - 50ns to 60ns (~6m) 0111b - 60ns to 70ns (~7m) 1000b - > 70ns (>~7m)
12~11	Cable Termination Type 00b - VCONN not required ***[Default]*** 01b - VCONN required
10~9	Maximum VBUS Voltage 00b - 20V 11b - 50V ***[Default]***
8~7	Reserved. Shall be set to zero.
6~5	VBUS Current Handling Capability 01b - 3A 10b - 5A ***[Default]***
4~3	Reserved. Shall be set to zero.
2~0	USB Highest Speed 000b - [USB 2.0]***[Default]*** 001b - [USB 3.2] Gen1 010b - [USB 3.2]/[USB4] Gen2 011b - [USB4] Gen3 100b - [USB4] Gen4

6.3.2 Discover SVIDs

The Discover SVIDs message is used by the device to obtain the standard ID or vendor ID of the cable from the eMarker. When CH251 receives a Discover SVIDs REQ, it replies with a Discover SVIDs ACK or NAK message in accordance with the protocol configuration.

6.3.3 Discover Modes, Enter Mode and Exit Mode

The Discover Modes message is used for the device to obtain the mode under the cable-specific SVID from the eMarker; the Enter Mode and Exit Mode messages are used to enter and exit the mode under the specific SVID. How CH251 responds to these three messages is determined by the "Modal Operation Supported" configuration in the Discover Identity message. When CH251 receives Discover Modes REQ, if the chip is configured to support Modal Operation, it will reply Discover Modes ACK according to the configured content, otherwise the message will be discarded after replying to GoodCRC.

6.3.4 Manufacturer_Info

When CH251 receives a Get_Manufacturer_Info, it uses Manufacturer_Info to reply. The Manufacturer_Info message contains vendor ID (VID) and product ID (PID). It can also contain a custom ASCII string of no more than 22 bytes, and the string content can be customized.

According to the USB PD 3.1 protocol, the specific format of the Manufacturer_Info message is as follows, and the factory default configuration value is marked.

Byte Offset	Description	Default Value
0	VID	0x1A86
2	PID	0x8251
4	Manufacturer String	"Nanjing Qinheng Micro."

6.4 Factory Default Configuration

CH251L leaves the factory with the default configuration of 100W2MUSB2.0, while CH251X has the default configuration of 240W2MUSB2.0 when it leaves the factory. Other non-major parameters in the configuration are detailed in the table listed in the 6.3.1 Discover Identity section. If you need to record other configurations, please contact our technical support.

6.5 Update Configuration

CH251 uses MTP ROM that can be written multiple times to store configuration parameters. Specifically, the parameters of the Discover Identity, Discover SVIDs, Discover Modes, and Manufacturer_Info messages can be configured as needed. CH251 supports 5 updates of configuration parameters and has a locking function. After locking, you cannot program and write parameters again.

Programming and writing needs to be carried out by using a special recorder and software. the special recorder can program and write the chip, finished terminal and finished cable. If necessary, please contact our technical support.

7. Parameters

7.1 Absolute Maximum Value (Critical or exceeding the absolute maximum value will probably cause the chip to work improperly or even be damaged)

Name	Parameter description	Min.	Max.	Unit
TA	Ambient temperature during operation	-40	110	℃
TS	Ambient temperature during storage	-55	125	℃
VCN	Voltage on VCN_A pin	-0.5	25	V
VIOCC	Voltage on CC pin	-0.5	28	V
VBUS	High voltage power supply input voltage VBUS (CH251L)	-0.5	25	V
VBUS	High voltage power supply input voltage VBUS (CH251X)	-0.5	56	V
PD	The maximum power consumption of the whole chip		300	mW

7.2 Electrical Parameters (Test conditions: T_A=25℃)

Name	Parameter description	Min.	Typ.	Max.	Unit
VCN	Input VCN_A voltage of auxiliary power supply	2.7	5.0	22	V
VBUS	High voltage power supply input voltage VBUS (CH251L)	2.7	5.0	22	V
VBUS	High voltage power supply input voltage VBUS (CH251X)	4.7	5.0	52	V
ICC	Power supply current at work		1.8	8	mA
RRA	VCN_A pin pull-down resistor Ra	800	1000	1200	Ω
VR	Voltage threshold for power-on reset of power supply	2.3	2.5	2.7	V
ESDVCN	ESD HMB of VCN_A pin		4		kV
ESDCC	ESD HMB of CC pin		7		kV

8. Package Information

Package form	Shaping width	Pin spacing		Package description	Order model
DFN6	2×2mm	0.65mm	25.6mil	Dual Flat No-lead Package	CH251L
DFN8	2×2mm	0.5mm	19.7mil	Dual Flat No-lead Package	CH251X

Description: The unit marked in the package information diagram is mm (mm).

The first line 251L and 251X of the chip screen print correspond to the chip CH251L and CH251X respectively, and the second line represents the chip lot number information.

Figure 8.1 DFN6-2×2 package size

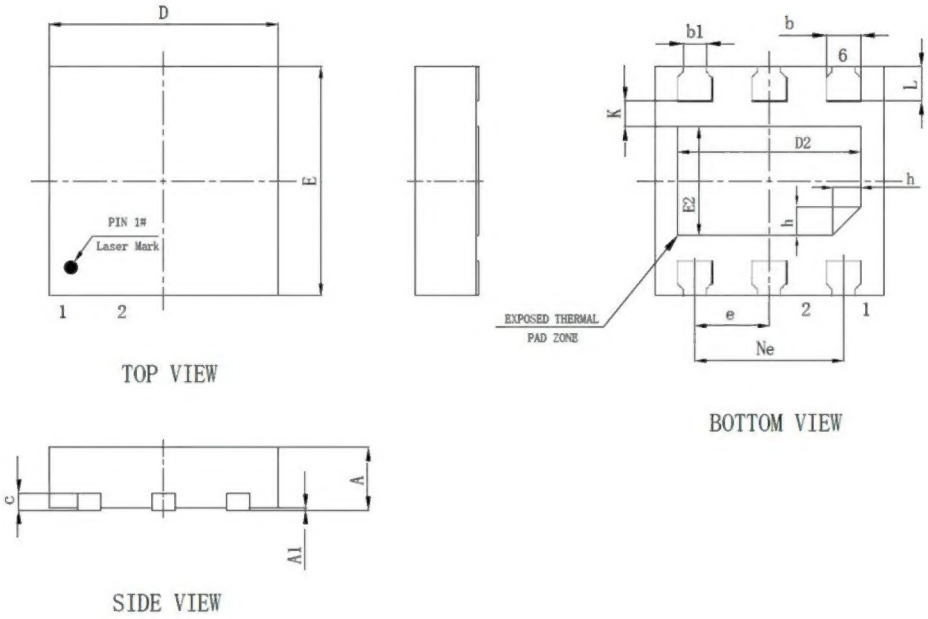

SYMBOL	MILLIMETER		
	MIN	NOM	MAX
A	0.50	0.55	0.60
A1	0	0.02	0.05
b	0.25	0.30	0.35
b1	0.15	0.20	0.25
c	0.10	0.15	0.20
D	1.90	2.00	2.10
D2	1.50	1.60	1.70
e	0.65BSC		
Ne	1.30BSC		
E	1.90	2.00	2.10
E2	0.85	0.95	1.05
L	0.25	0.30	0.35
h	0.20	0.25	0.30
K	0.20	0.225	0.28
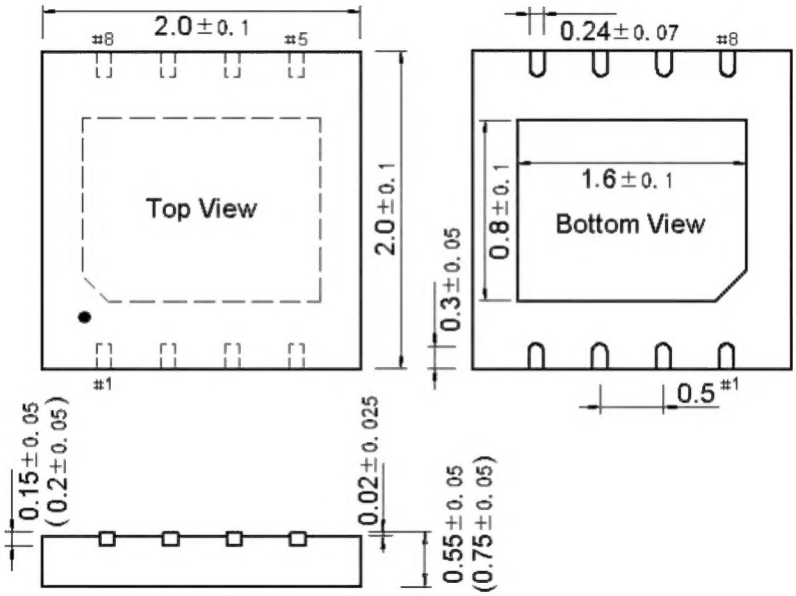
Figure 8.2 DFN8-2×2 package size